HOSHIZAKI

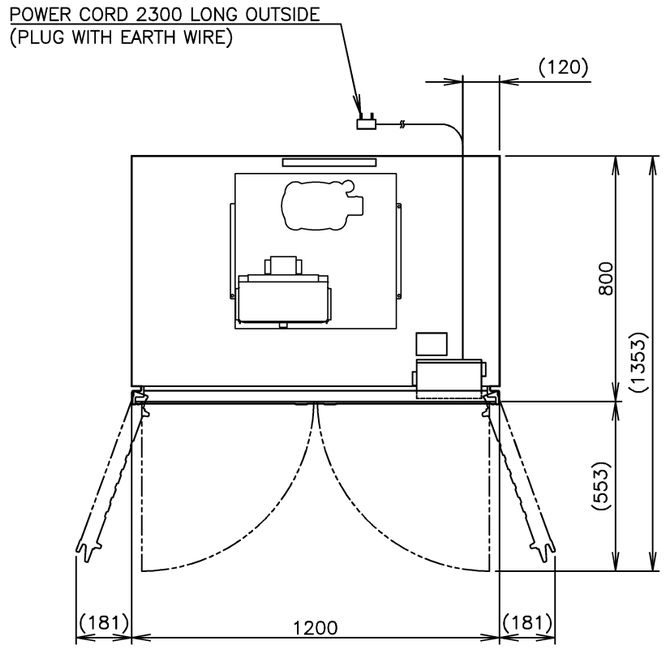

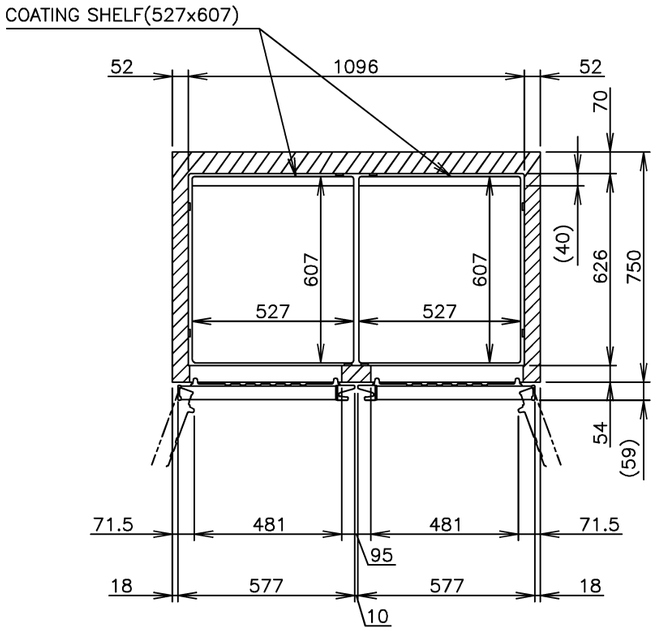

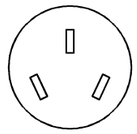

PLUG

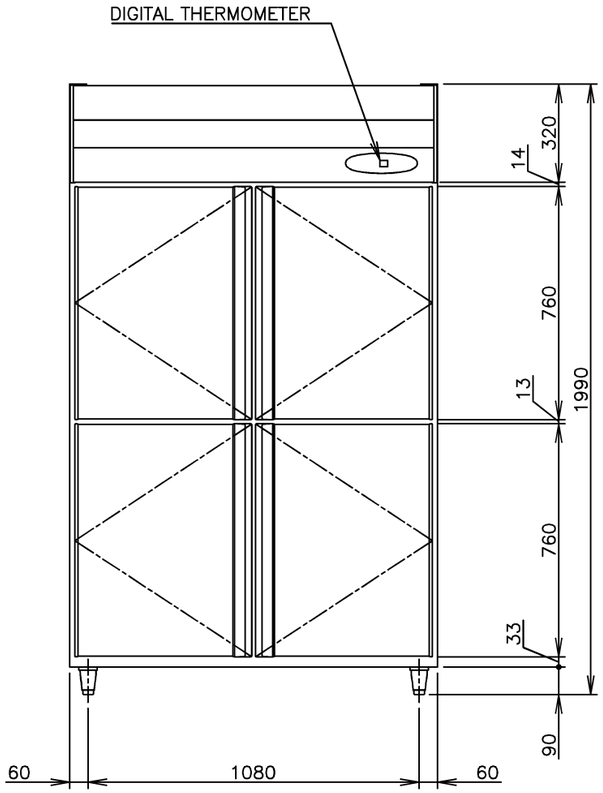

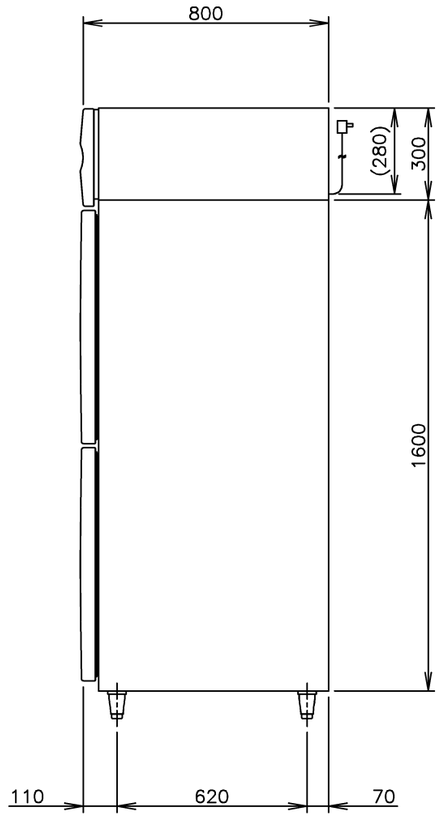

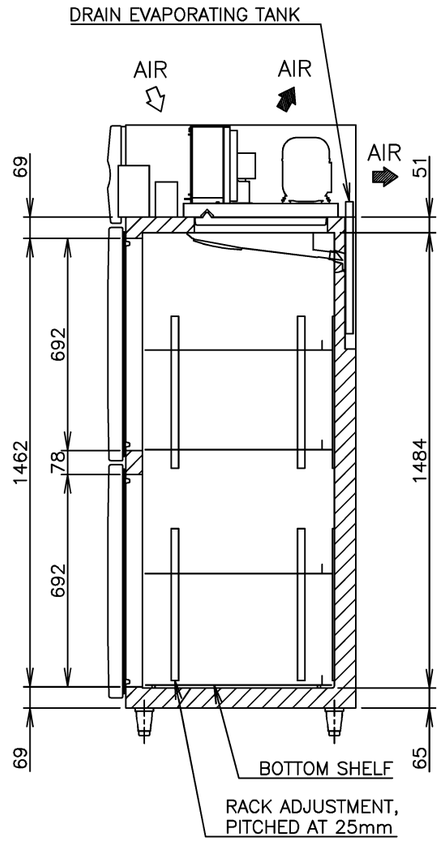

ITEM	Hoshizaki Reach−in Refrigerator
MODEL	HRE−127MA−CHD
POWER SUPPLY	1 Phase 220 − 240V 50Hz Capacity: 0.72kVA (3.3A)
AMPERAGE	Rated: 2.44A Starting: 12A
ELECTRIC CONSUMPTION	343W (Power Factor: 60%)(Except Drain Tank Heater 170W) Heater: 218W Defrost: 218W
HEAT REJECTION	560W
POWER CORD	2.3m (Plug with Earth Wire)
EFFECTIVE CAPACITY	1080L
OUTSIDE DIMENSIONS	1200mm(W) x 800mm(D) x 1990(−2020)mm(H)
INSIDE DIMENSIONS	1096mm(W) x 626mm(D) x 1484mm(H)
EXTERIOR	Precoated Steel, Galvanized Steel(Rear, Bottom)
INTERIOR	Precoated Steel, ABS Plastic(Door)
INSULATION	Polyurethane Foam
INSULATION FOAM BLOWING AGENT	Cyclopentane
REFRIGERATION SYSTEM	Forced Air Circulation
DEFROST SYSTEM	Off Cycle
COMPRESSOR	Hermetic 270W (cooling capacity)
CONDENSER	Fin and Tube type, Air−cooled
EVAPORATOR	Fin and Tube type
REFRIGERANT	R134a
TEMPERATURE CONTROL	Microprocessor (Digital Temp. Indication) Adjustable from −2 to 12° C
DEFROST CONTROL	Microprocessor
ELECTRIC CIRCUIT PROTECTION	Earth Wire
REFRIGERANT CIRCUIT PROTECTION	Motor Protector (Auto−reset)
LEG	Plastic Adjustable from 90 to 120mm
SHELF	8 pcs.(Include Bottom Shelf)
WEIGHT	141kg (Gross 172kg)
PACKAGE	Carton (Wooden Pallet) 1260mm(W) x 900mm(D) x 2075mm(H)
OPERATING CONDITIONS	Ambient Temperature: 5 − 43°C Voltage Range: Rated Voltage ±6%

*We reserve the right to make changes in specifications and design without prior notice.

1. Install the product properly in accordance with the instructions on location, water supply/drain connections and electrical connections stated in the instruction and installation manuals provided.
   Allow 10mm extra space at the installation site to meet any installation requirements (additional spacing is also required for proper air flow and pipe connections).
2. The heat rejection is based on the reached pulldown temperature at ambient temperature of 35°C.
3. The drain tank may overflow if the door is opened frequently or under highly humid conditions in the rainy or summer season.
4. Product Code: R263−C271

*CUSTOMIZED
DRAIN TANK

HOSHIZAKI REACH−IN REFRIGERATOR HRE−127MA−CHD (CUSTOMIZED)

APPROVED	CHECKED	DESIGNED	DRAWN	SCALE	
ISHIGURO	TAKAOKA	KATO	WATANABE	1/20	TRIGONOMETRY
ISHIKAWA / APPROVED	HAYASHI / DESIGNED	2 / SYMBOL	2017.07.14 / DATE	DATE 2012.04.25	DRAWING NO. D11299 / SYMBOL 2