02 Mixer Stand with Splashback

SIMPLY STAINLESS
Modular Sinks, Tables & Shelving

Product Information:

- Low height Mixer Stand with rear 150mm splashback with beveled edge
- 1.2mm thick 304 stainless steel top
- 3mm zinc anneal steel reinforced backing to work top
- 38mm diameter round stainless steel tube legs, 1.2mm thick
- Adjustable stainless steel disk feet fitted as standard
- 1.2mm thick stainless steel under-shelf with top hat stiffening
- Vermin proofing included behind upstand with pre-drilled holes for fixing bench to rear wall
- Supplied flat packed ready for assembly

General Drawing:

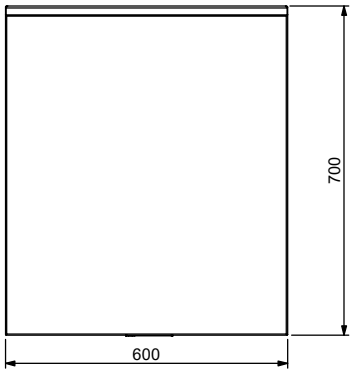

PLAN

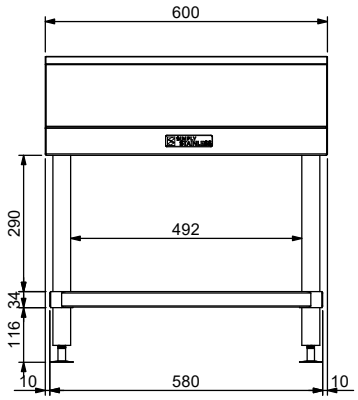

FRONT ELEVATION

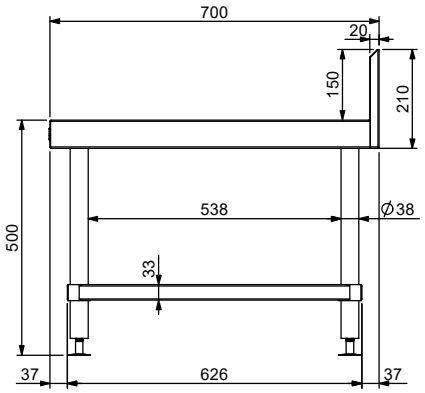

SIDE ELEVATION

Specifications:

SS02.7.0600.MS 600mm x 700mm x 500mm

Due to continuous product research and development,
the information contained herein is subject to change without notice.

Revision: A - 16/03/2021